PROJECT REFERENCE NO.	SHEET NO.
W-5601BA	Sig. 4.1

EDI MODEL 2018ECL-NC CONFLICT MONITOR PROGRAMMING DETAIL

(remove jumpers and set switches as shown)

REMOVE DIODE JUMPERS 2-5, 2-6, 2-7, 2-9, 2-10, 2-11, 2-12, 2-13, 2-15, 3-10, 3-11, 3-16, 4-7, 4-9 4-12, 4-14, 5-7, 5-9, 5-11, 5-12, 5-13, 6-7, 6-9, 6-10, 6-11, 6-12, 6-13, 6-15, 7-9, 7-10, 7-11, 7-12, 7-13, 7-14, 7-15, 9-10, 9-11, 9-12, 9-13, 9-14, 9-15, 10-11, 10-12, 10-13, 10-15, 10-16, 11-12, 11-13, 11-15, 11-16, 12-13, 12-14, 12-15 and 13-15.

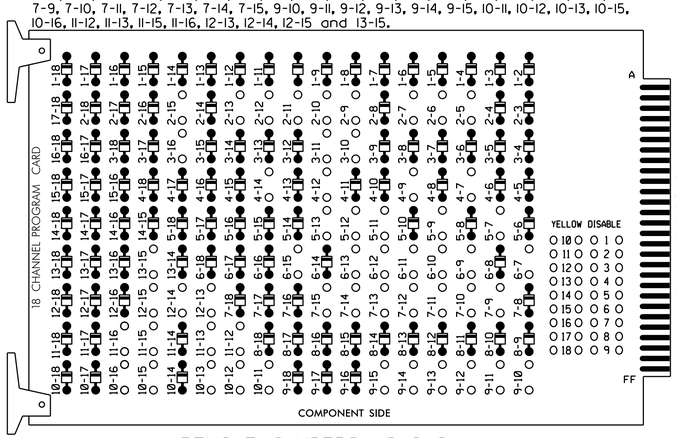

REMOVE JUMPERS AS SHOWN

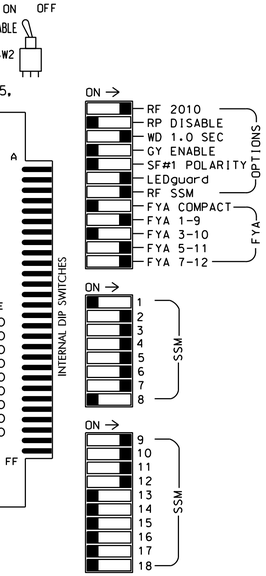

NOTES:

1. Card is provided with all diode jumpers in place. Removal of any jumper allows its channels to run concurrently.
2. Ensure jumpers SEL2-SEL5 and SEL9 are present on the monitor board.
3. Ensure that Red Enable is active at all times during normal operation.
4. Connect serial cable from conflict monitor to comm. port 1 of 2070 controller. Ensure conflict monitor communicates with 2070.

NOTES

1. To prevent "flash-conflict" problems, insert red flash program blocks for all unused vehicle load switches in the output file. The installer shall verify that signal heads flash in accordance with the Signal Plans.
2. Enable Simultaneous Gap-Out for all Phases.
3. Program phases 2 and 6 for Startup In Green.
4. Program phases 2, 3, 4 and 6 for Startup Ped Call.
5. Program phases 2 and 6 for Yellow Flash, and overlaps 1 and 2 as Wag Overlaps.

EQUIPMENT INFORMATION

CONTROLLER.....2070
CABINET.....332 W/ AUX
SOFTWARE.....ECONOLITE OASIS
CABINET MOUNT.....BASE
OUTPUT FILE POSITIONS...18 WITH AUX. OUTPUT FILE
LOAD SWITCHES USED.....S2,S3,S4,S5,S6,S7,S8,S9,S10,S12, AUX S1,AUX S2,AUX S4,AUX S5
PHASES USED.....2,2 PED,3,3 PED,4,4 PED,5,6,6 PED
OVERLAP "A".....2+4
OVERLAP "B".....3+6
OVERLAP "C".....3+5+6
OVERLAP "D".....2+4
OVERLAP "E".....NOT USED
OVERLAP "F".....NOT USED
OVERLAP "G".....2+4

SIGNAL HEAD HOOK-UP CHART

LOAD SWITCH NO.	S1	S2	S3	S4	S5	S6	S7		S8	S9	S10	S11	S12	AUX S1	AUX S2	AUX S3	AUX S4	AUX S5	AUX S6
CMU CHANNEL NO.	1	2	13	3	4	14	5		6	15	7	8	16	9	10	17	11	12	18
PHASE	1	2	2 PED	3	4	4 PED	5		6	6 PED	OLG	8	8 PED	OLA	OLB	SPARE	OLC	OLD	SPARE
SIGNAL HEAD NO.	NU	21,22	P21, P22	31,32	41,42	P41, P42	42	51★	61,62	P61, P62	23,24	NU	P31,P32 P33,P34	65	63,64	NU	51★	25	NU
RED		128		116	101			✱	134		122				A124				
YELLOW		129		117	102				135		123				A125				
GREEN		130		118	103				136		124				A126				
RED ARROW														A121			A114	A101	
YELLOW ARROW							132							A122			A115	A102	
FLASHING YELLOW ARROW														A123			A116	A103	
GREEN ARROW							133	133											
✋			113			104				119			110						
🚶			115			106				121			112						

NU = Not Used

✱ Denotes install load resistor. See load resistor installation detail this sheet.

★ See pictorial of head wiring in detail this sheet.

FYA SIGNAL WIRING DETAIL

(wire signal heads as shown)

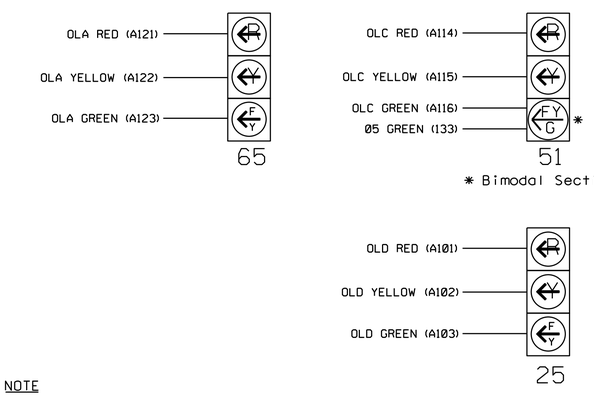

NOTE

The sequence display for signal head 51 requires special logic programming. See sheet 2 for programming instructions.

INPUT FILE POSITION LAYOUT

(front view)

		1	2	3	4	5	6	7	8	9	10	11	12	13	14
FILE "I"	U	SLOT EMPTY	Ø2 2A	SLOT EMPTY	WIRED INPUT ⊗	Ø3 3A	Ø4 4A	SLOT EMPTY	SLOT EMPTY	SLOT EMPTY	SLOT EMPTY	SLOT EMPTY	Ø2 PED DC ISOLATOR	Ø6 PED DC ISOLATOR	FS DC ISOLATOR
	L		Ø2 2B			NOT USED	NOT USED						Ø4 PED DC ISOLATOR	Ø3 PED DC ISOLATOR	ST DC ISOLATOR
FILE "J"	U	Ø5 5A	Ø5 5B	Ø6 6A	SLOT EMPTY	SLOT EMPTY	SLOT EMPTY	SLOT EMPTY	SLOT EMPTY	SLOT EMPTY	SLOT EMPTY	SLOT EMPTY	SLOT EMPTY	SLOT EMPTY	SLOT EMPTY
	L	NOT USED	NOT USED	Ø6 6B											

EX.: 1A, 2A, ETC. = LOOP NO.'S

⊗ Wired Input - Do not populate slot with detector card

FS = FLASH SENSE
ST = STOP TIME

INPUT FILE CONNECTION & PROGRAMMING CHART

LOOP NO.	LOOP TERMINAL	INPUT FILE POS.	PIN NO.	INPUT ASSIGNMENT NO.	DETECTOR NO.	NEMA PHASE	CALL	EXTEND	FULL TIME DELAY	STRETCH TIME	DELAY TIME
2A	TB2-5,6	I2U	39	1	2	2	Y	Y			
2B	TB2-7,8	I2L	43	5	12	2	Y	Y			
3A	TB4-5,6	I5U	58	20	3	3	Y	Y			5
4A	TB4-9,10	I6U	41	3	4	4	Y	Y			3
5A[1]	TB3-1,2	J1U	55	17	5	5	Y	Y			15
	-	I4U	47	9	22	2	Y	Y			
5B	TB3-5,6	J2U	40	2	6	5	Y	Y			15
6A	TB3-9,10	J3U	64	26	36	6	Y	Y			
6B	TB3-11,12	J3L	77	39	46	6	Y	Y			
PED PUSH BUTTONS											
P21,P22	TB8-4,6	I12U	67	29	PED 2	2 PED					
P41,P42	TB8-5,6	I12L	69	31	PED 4	4 PED					
P61,P62	TB8-7,9	I13U	68	30	PED 6	6 PED					
P31,P32,P33,P34	TB8-8,9	I13L	70	32	PED 8	3 PED					

[1] Add jumper from J1-W to I4-W, on rear of input file.

NOTE:
INSTALL DC ISOLATORS IN INPUT FILE SLOTS I12 AND I13.

INPUT FILE POSITION LEGEND: J2L
FILE J
SLOT 2
LOWER

LOAD RESISTOR INSTALLATION DETAIL

(install resistor as shown below)

ACCEPTABLE VALUES

VALUE (ohms)	WATTAGE
1.5K - 1.9K	25W (min)
2.0K - 3.0K	10W (min)

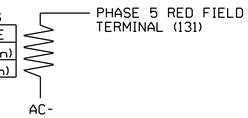

THIS ELECTRICAL DETAIL IS FOR
THE SIGNAL DESIGN: 08-0121
DESIGNED: September 2017
SEALED: 9-25-17
REVISED: N/A

Electrical Detail - Sheet 1 of 2

DOCUMENT NOT CONSIDERED FINAL UNLESS ALL SIGNATURES COMPLETED

ELECTRICAL AND PROGRAMMING DETAILS FOR:

Prepared in the Offices of:
Transportation Mobility and Safety Division
Traffic Engineering Branch
Signals Management Section
750 N.Greenfield Pkwy,Garner,NC 27529

US 220 Bus. (Fayetteville St.)
at
Sunset Ave. and Worth Street

Division 8 Randolph County Asheboro

PLAN DATE: September 2016 REVIEWED BY:
PREPARED BY: James Peterson REVIEWED BY:

REVISIONS	INIT.	DATE

SEAL
NORTH CAROLINA PROFESSIONAL SEAL 036880 ENGINEER KEITH M. MIMS

DocuSigned by: Keith M. Mims 9/29/2017
2F8078BE8CD34A5 DATE

SIG. INVENTORY NO. 08-0121

29-SEP-2017 10:53
S:\TISSUM\TS_Signals\Workgroups\Sig Mon\Peterson\08121_sm_ele_xxx.dgn
jtpeterson